Work Order ID 74516

Monday, October 03, 2011 4:00:36 PM

Item ID: D3414-041
Revision ID:
Item Name: Lug Assembly
Start Date: 9/30/2011 **Start Qty:** 10.00
Required Date: 10/14/2011 **Req'd Qty:** 10.00
Reference:

Accept

Setup Start
Stop

Cust Item ID:
Customer:

Run Start
Stop

Approvals: **Process Plan:** M L J **Date:** 11/10/03 **Tooling:** _____ **Date:** _____
QC: _____ **Date:** _____ **SPC (Y/N):** _____ **Date:** _____

Sequence ID/ Work Center ID	Operation Description	Set Up/ Run Hours	Tool ID	Tool #	Plan Code	Accept Qty	Reject Qty	Reject Number	Insp. Stamp
Draw Nbr	**Revision Nbr**								
D3414	Rev C								
100		0.00							
Waterjet	**Memo**	0.00				BH-10-20			
FLOW CNC Waterjet	1-Cut as per Dwg D3414-1 Dwg Rev: C Prog Rev: C								
304 .100	2-Deburr if necessary BH-10-28								10
110	QC2- Inspect parts off machine FAI/FAIB	0.00							
QC	**Memo**	0.00				BH-10-20			
Quality Control									

Dart Aerospace Ltd

W/O:		WORK ORDER CHANGES					
DATE	STEP	PROCEDURE CHANGE	By	Date	Qty	Approval Chief Eng / Prod Mgr	Approval QC Inspector

Part No: _____ **PAR #:** _____ **Fault Category:** _____ **NCR:** Yes No **DQA:** _____ **Date:** _____

Resolution: _____ **Disposition:** _____ **QA: N/C Closed:** _____ **Date:** _____

NCR:		WORK ORDER NON-CONFORMANCE (NCR)						
DATE	STEP	Description of NC Section A	Corrective Action Section B			Verification Section C	Approval Chief Eng	Approval QC Inspector
			Initial Chief Eng	Action Description Chief Eng	Sign & Date			

NOTE: Date & initial all entries

H:\fFORMS\Quality Assurance\approved QA\NCRWO RevE

Work Order ID 74516

Monday, October 03, 2011 4:00:36 PM

Item ID: D3414-041 **Accept** **Setup Start**

Revision ID:

Item Name: Lug Assembly **Stop**

Start Date: 9/30/2011 **Start Qty:** 10.00 **Cust Item ID:**

Required Date: 10/14/2011 **Req'd Qty:** 10.00 **Customer:**

Reference:

Approvals: **Process Plan:** _____ **Date:** _____ **Tooling:** _____ **Date:** _____ **Run Start**

QC: _____ **Date:** _____ **SPC (Y/N):** _____ **Date:** _____ **Stop**

Sequence ID/ Work Center ID	Operation Description	Set Up/ Run Hours	Tool ID	Tool #	Plan Code	Accept Qty	Reject Qty	Reject Number	Insp. Stamp
120	QC8- Inspect parts - second check	0.00							
QC	Memo	0.00	S 11/10/28			10			
Quality Control									
130		0.00							
Brake NC	Memo	0.00	SB 11/11/02						
Brake NC	1-Deburr 2-Form using DT8254 as per Dwg D3414								
140		0.00							
Large Fab	Memo	0.00	PC 11.11.04			10x			
Large Fab	1- Weld using location Jig DT9625 as per Dwg D3414 A/R S.S. welding rod Batch: 117659								

Dart Aerospace Ltd

W/O:		WORK ORDER CHANGES					
DATE	STEP	PROCEDURE CHANGE	By	Date	Qty	Approval Chief Eng / Prod Mgr	Approval QC Inspector

Part No: _____ **PAR #:** _____ **Fault Category:** _____ **NCR:** Yes No **DQA:** _____ **Date:** _____

Resolution: _____ **Disposition:** _____ **QA: N/C Closed:** _____ **Date:** _____

NCR:		WORK ORDER NON-CONFORMANCE (NCR)						
DATE	STEP	Description of NC Section A	Corrective Action Section B			Verification Section C	Approval Chief Eng	Approval QC Inspector
			Initial Chief Eng	Action Description Chief Eng	Sign & Date			

NOTE: Date & initial all entries

H:\FORMS\Quality Assurance\approved QA\NCRWO RevE

Work Order ID 74516

Monday, October 03, 2011 4:00:36 PM

Item ID: D3414-041 **Accept** **Setup Start** **Stop**

Revision ID:

Item Name: Lug Assembly

Start Date: 9/30/2011 **Start Qty:** 10.00 **Cust Item ID:**

Required Date: 10/14/2011 **Req'd Qty:** 10.00 **Customer:**

Reference:

Approvals: **Process Plan:** _____ **Date:** _____ **Tooling:** _____ **Date:** _____ **Run Start** **Stop**

QC: _____ **Date:** _____ **SPC (Y/N):** _____ **Date:** _____

Sequence ID/ Work Center ID	Operation Description	Set Up/ Run Hours	Tool ID	Tool #	Plan Code	Accept Qty	Reject Qty	Reject Number	Insp. Stamp
150	QC9- Inspect visual per QSI004- Fusion Welds	0.00							
QC	Memo	0.00	11.11.08			10	0		11/11/08
Quality Control									
160	QC5- Inspect part completeness to step on W/O	0.00							
QC	Memo	0.00	11/11/08			10			
Quality Control									
170	White Gloss(Ref:4.3.5.1) per QSI005 4.3-Alum	0.00							
Powdercoat	Memo	0.00							
Powder Coating	START TIME: 2:50 OVEN TEMPERATURE: 400°F FINISH TIME: 3:20								

M118434

10X ~~0~~ M 11/11/09

Dart Aerospace Ltd

W/O:		WORK ORDER CHANGES					
DATE	STEP	PROCEDURE CHANGE	By	Date	Qty	Approval Chief Eng / Prod Mgr	Approval QC Inspector

Part No: _____ **PAR #:** _____ **Fault Category:** _____ **NCR:** Yes No **DQA:** _____ **Date:** _____

Resolution: _____ **Disposition:** _____ **QA: N/C Closed:** _____ **Date:** _____

NCR:		WORK ORDER NON-CONFORMANCE (NCR)						
DATE	STEP	Description of NC Section A	Corrective Action Section B			Verification Section C	Approval Chief Eng	Approval QC Inspector
			Initial Chief Eng	Action Description Chief Eng	Sign & Date			

NOTE: Date & initial all entries

H:\fFORMS\Quality Assurance\approved QA\NCRWO RevE

Work Order ID 74516

Monday, October 03, 2011 4:00:36 PM

Item ID: D3414-041 **Accept** **Setup Start**

Revision ID: **Stop**

Item Name: Lug Assembly

Start Date: 9/30/2011 **Start Qty:** 10.00 **Cust Item ID:**

Required Date: 10/14/2011 **Req'd Qty:** 10.00 **Customer:**

Reference:

Run Start

Approvals: **Process Plan:** _____ **Date:** _____ **Tooling:** _____ **Date:** _____

Stop

QC: _____ **Date:** _____ **SPC (Y/N):** _____ **Date:** _____

Sequence ID/ Work Center ID	Operation Description	Set Up/ Run Hours	Tool ID	Tool #	Plan Code	Accept Qty	Reject Qty	Reject Number	Insp. Stamp
180	QC3- Inspect Part Finish	0.00							
QC	**Memo**	0.00				10	BL	11-12-9.	
Quality Control									
190	Identify as per dwg & Stock Location: St 479.	0.00							
Packaging	**Memo**	0.00				Sp	11-11-10.		
Packaging									
200	QC21- Final Inspection - Work Order Release	0.00							
QC	**Memo**	0.00					11/11/11		
Quality Control									

MF 11-11-10

Dart Aerospace Ltd

W/O:		WORK ORDER CHANGES					
DATE	STEP	PROCEDURE CHANGE	By	Date	Qty	Approval Chief Eng / Prod Mgr	Approval QC Inspector

Part No: _____ **PAR #:** _____ **Fault Category:** _____ **NCR:** Yes No **DQA:** _____ **Date:** _____

Resolution: _____ **Disposition:** _____ **QA: N/C Closed:** _____ **Date:** _____

NCR:		WORK ORDER NON-CONFORMANCE (NCR)						
DATE	STEP	Description of NC Section A	Corrective Action Section B			Verification Section C	Approval Chief Eng	Approval QC Inspector
			Initial Chief Eng	Action Description Chief Eng	Sign & Date			

NOTE: Date & initial all entries

H:\fFORMS\Quality Assurance\approved QA\NCRWO RevE

Picklist Print

Monday, October 03, 2011 4:00:41 PM

Work Order ID: 74516

Parent Item: D3414-041

Parent Item Name: Lug Assembly

Start Date: 9/30/2011 **Required Date:** 10/14/2011

Start Qty: 10.00 **Required Qty:** 10.00

Comments: IPP A□05.09.13□New issue□KJ/JLM□

Component Item ID/ Item Name	Replacement Item ID	Mfg/ Purch	Bin Item	Primary Location	Last Location	Route Seq ID	Unit of Measure	Qty on Hand	Qty per Kit	Total Qty	Qty Issued	Date Issued	Status
M304S12GA 304/316 0.100" Sheet		Purchased	No			100	sf	139.5800	0.155	1.55 B11-10-20			
				Location			**Loc Qty**		**Loc Code**				
				MAT019			139.58						
					113062		118.3						
					113077		21.28			~~113077~~			
D3414-3 Lug		Manufactured	No			140	Each	14.0000	1	10 Pc 11-11-03			
				Location			**Loc Qty**		**Loc Code**				
				WA030			14						
					72327		14			16			

Dart Aerospace Ltd

W/O:		WORK ORDER CHANGES					
DATE	STEP	PROCEDURE CHANGE	By	Date	Qty	Approval Chief Eng / Prod Mgr	Approval QC Inspector

Part No: _____ **PAR #:** _____ **Fault Category:** _____ **NCR:** Yes No **DQA:** _____ **Date:** _____

Resolution: _____ **Disposition:** _____ **QA: N/C Closed:** _____ **Date:** _____

NCR:		WORK ORDER NON-CONFORMANCE (NCR)						
DATE	STEP	Description of NC Section A	Corrective Action Section B			Verification Section C	Approval Chief Eng	Approval QC Inspector
			Initial Chief Eng	Action Description Chief Eng	Sign & Date			

NOTE: Date & initial all entries

H:\fFORMS\Quality Assurance\approved QA\NCRWO RevE

DART AEROSPACE LTD	Work Order:	74516
Description: Lug Bracket	Part Number:	D3414-1
Inspection Dwg: D3414 Rev: C		Page 1 of 1

FIRST ARTICLE INSPECTION CHECKLIST

[X] First Article [X] Prototype

Drawing Dimension	Tolerance	Actual Dimension	Accept	Reject	Method of Inspection	Comments
Ø0.313	+0.006/-0.001	.315	2		V BG	
1.19	+/-0.030	1.188	2		V	
1.00	+/-0.030	1.013	2		V	
3.38	+/-0.030	3.372	2		V	
5.350	+/-0.010	5.355	2		V	
6.23	+/-0.030	6.228	2		V	
2.500	+/-0.010	2.497	2		V	
0.37	+/-0.030	.371	2		V	
0.100	+/-0.010	.105	2		V	

Measured by:	B
Date:	11-10-20

Audited by:	δ
Date:	11/10/28

Prototype Approval:	N/A
Date:	N/A

Rev	Date	Change	Revised by	Approved
A	08.02.28	New Issue P/O D3414-041	KJ/DD	
B	09.05.27	Dimensions updated per Dwg Rev B	KJ	
C	09.10.16	Dwg Rev updated to Rev C	KJ	

ITEM No.	QTY. -041	PART NUMBER	DESCRIPTION
1	X	D3414-041	LUG ASSEMBLY
2	1	D3414-1	LUG BRACKET
3	1	D3414-3	LUG

SHOP COPY
RETURN TO
ENGINEERING
UNCONTROLLED COPY
SUBJECT TO AMENDMENT
WITHOUT NOTICE
WORK ORDER
NO. 74516 M.L.J
11/10/03

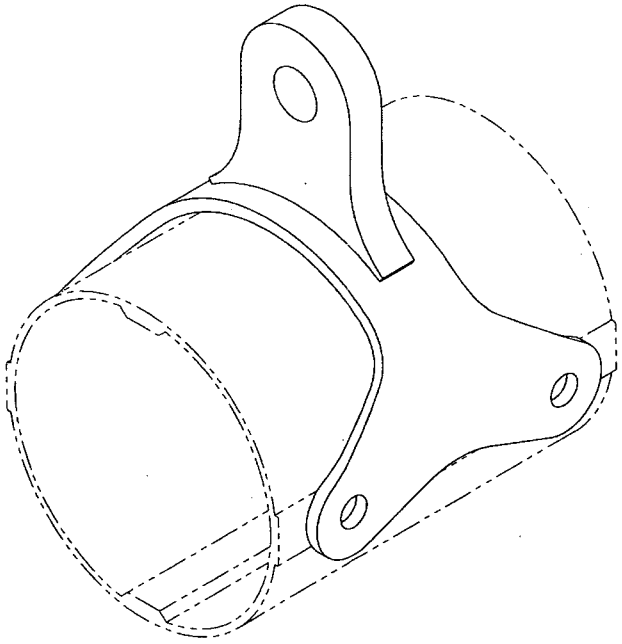

D3414-041 LUG ASSEMBLY

RELEASED 09/06/06

REV.	DESCRIPTION	BY	DATE
C	BREAK SHARP EDGES FOR -3 NOW 0.030-0.060 WAS 0.010-0.030 (ZN A7-3)	CP	09.06.17
B	DRAWING REDRAWN IN SOLIDWORKS WITH CURRENT STANDARDS AND TRANSFERED TO "B" SIZE BORDER. FLAT PATTERN FOR -1 INCREASED IN LENGTH TO PREVENT FOULING AT INSTL (SEE PAR198). FLAT SPOTS REMOVED FROM -1 (PART NOW "U" SHAPED) FOR EASE OF MANUFACTURE. B7-3 ADDED TOLERANCE TO 3.230 DIM. C2-3 1.12 DIM WAS 1.20.	AJS	08.09.23
A	NEW ISSUE	CP	05.03.16

DESIGN	CP	**DART AEROSPACE LTD** HAWKESBURY, ONTARIO, CANADA
DRAWN	CP	
CHECKED		DRAWING NO. D3414 — REV. C — SHEET 1 OF 3
MFG. APPR.		
APPROVED		TITLE: LUG ASSEMBLY — SCALE: NTS
DE APPR.		
DATE	09.06.17	

NOTES:
1) MATERIAL: N/A
2) FINISH: POWDER COAT WHITE (4.3.5.2) PER DART QSI 005 4.3
3) TOLERANCES: PER DART QSI 018 UNLESS OTHERWISE NOTED
4) UNITS: INCHES UNLESS OTHERWISE NOTED
5) BREAK SHARP EDGES: 0.005 TO 0.010 MAX
6) IDENTIFICATION: IDENTIFY WITH DART P/N "D3414-041" USING FINE POINT PERMANENT INK MARKER
7) WEIGHT: 0.52 lbs

Dart Aerospace Ltd

W/O:		WORK ORDER CHANGES					
DATE	STEP	PROCEDURE CHANGE	By	Date	Qty	Approval Chief Eng / Prod Mgr	Approval QC Inspector

Part No: _____ **PAR #:** _____ **Fault Category:** _____ **NCR:** Yes No **DQA:** _____ **Date:** _____

Resolution: _____ **Disposition:** _____ **QA: N/C Closed:** _____ **Date:** _____

NCR:		WORK ORDER NON-CONFORMANCE (NCR)						
DATE	STEP	Description of NC Section A	Corrective Action Section B			Verification Section C	Approval Chief Eng	Approval QC Inspector
			Initial Chief Eng	Action Description Chief Eng	Sign & Date			

NOTE: Date & initial all entries

H:\fFORMS\Quality Assurance\approved QA\NCRWO RevE

74516

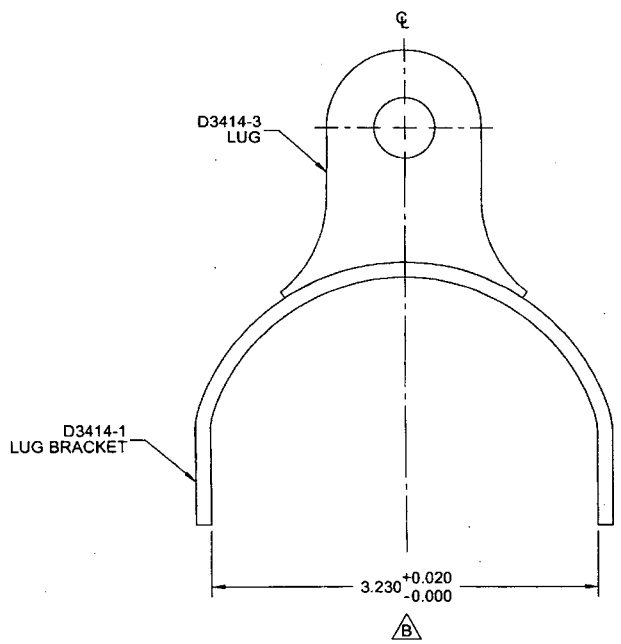

D3414-041 LUG ASSEMBLY

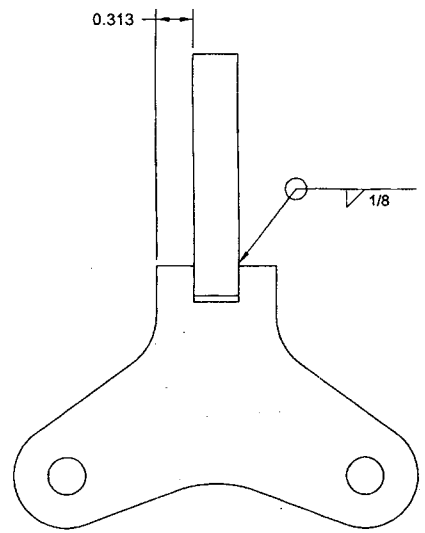

RELEASED 09/12/06

DESIGN	CP	**DART AEROSPACE LTD** HAWKESBURY, ONTARIO, CANADA
DRAWN	CP	
CHECKED		DRAWING NO. D3414 — REV. C — SHEET 2 OF 3
MFG. APPR.		
APPROVED		TITLE LUG ASSEMBLY — SCALE NTS
DE APPR.		
DATE	09.06.17	

Dart Aerospace Ltd

W/O:		WORK ORDER CHANGES					
DATE	STEP	PROCEDURE CHANGE	By	Date	Qty	Approval Chief Eng / Prod Mgr	Approval QC Inspector

Part No: _____ **PAR #:** _____ **Fault Category:** _____ **NCR:** Yes No **DQA:** _____ **Date:** _____

Resolution: _____ **Disposition:** _____ **QA: N/C Closed:** _____ **Date:** _____

NCR:		WORK ORDER NON-CONFORMANCE (NCR)						
DATE	STEP	Description of NC Section A	Corrective Action Section B			Verification Section C	Approval Chief Eng	Approval QC Inspector
			Initial Chief Eng	Action Description Chief Eng	Sign & Date			

NOTE: Date & initial all entries

H:\FORMS\Quality Assurance\approved QA\NCRWO RevE

74516

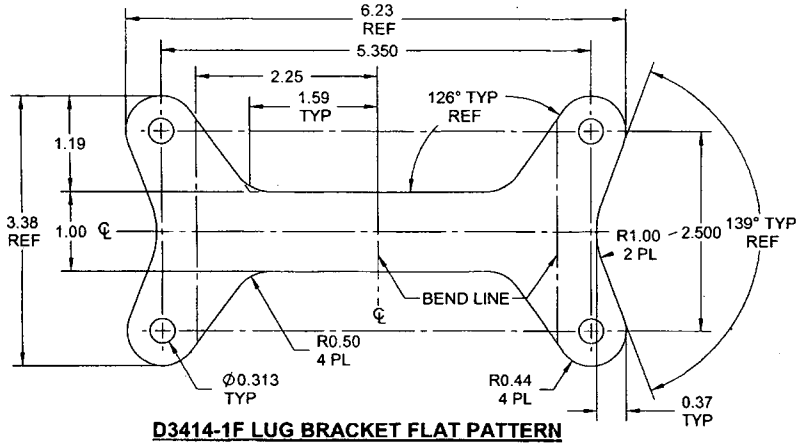

D3414-1F LUG BRACKET FLAT PATTERN

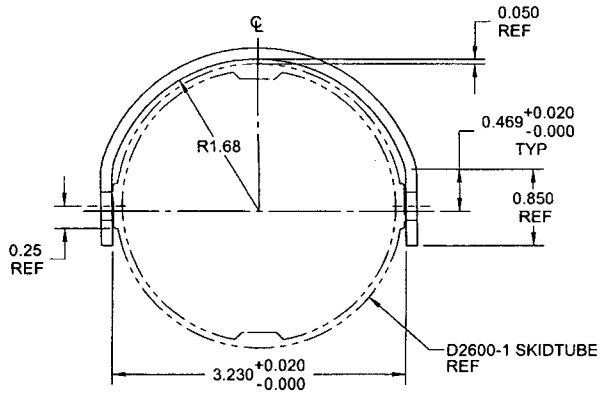

D3414-1 LUG BRACKET

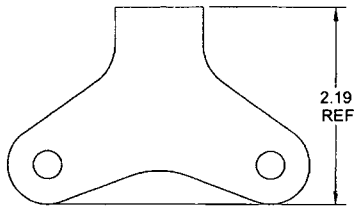

SIDE VIEW FOR REF ONLY

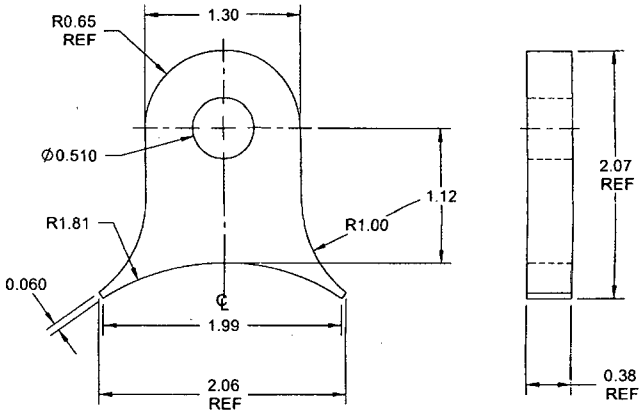

D3414-3 LUG

NOTES:
1) MATERIAL: -1: AISI 304/316 STAINLESS STEEL SHEET, 12 GAUGE (0.100 THICK)
PER MIL-S-5059 (ANNEALED) 2B FINISH OR AMS 5513/5524
REF. DART SPEC. M304S12GA

-3: AISI 304/316 STAINLESS STEEL PLATE
PER MIL-S-5059 (ANNEALED) 2B FINISH OR AMS 5513/5524
REF. DART SPEC. M304S

2) FINISH: N/A
3) TOLERANCES: PER DART QSI 018 UNLESS OTHERWISE NOTED
4) UNITS: INCHES UNLESS OTHERWISE NOTED
5) BREAK SHARP EDGES: -1: 0.010 TO 0.020 MAX
-3: 0.030 TO 0.060 MAX (C)
6) IDENTIFICATION: N/A
7) WEIGHT: N/A

RELEASED 09/06/06

DESIGN	CP	**DART AEROSPACE LTD** HAWKESBURY, ONTARIO, CANADA
DRAWN	CP	
CHECKED		DRAWING NO. D3414 — REV. C — SHEET 3 OF 3
MFG. APPR.		
APPROVED		TITLE: LUG ASSEMBLY — SCALE: NTS
DE APPR.		
DATE	09.06.17	

Dart Aerospace Ltd

W/O:		WORK ORDER CHANGES					
DATE	STEP	PROCEDURE CHANGE	By	Date	Qty	Approval Chief Eng / Prod Mgr	Approval QC Inspector

Part No: _____ **PAR #:** _____ **Fault Category:** _____ **NCR:** Yes No **DQA:** _____ **Date:** _____

Resolution: _____ **Disposition:** _____ **QA: N/C Closed:** _____ **Date:** _____

NCR:		WORK ORDER NON-CONFORMANCE (NCR)						
DATE	STEP	Description of NC Section A	Corrective Action Section B			Verification Section C	Approval Chief Eng	Approval QC Inspector
			Initial Chief Eng	Action Description Chief Eng	Sign & Date			

NOTE: Date & initial all entries

H:\FORMS\Quality Assurance\approved QA\NCRWO RevE